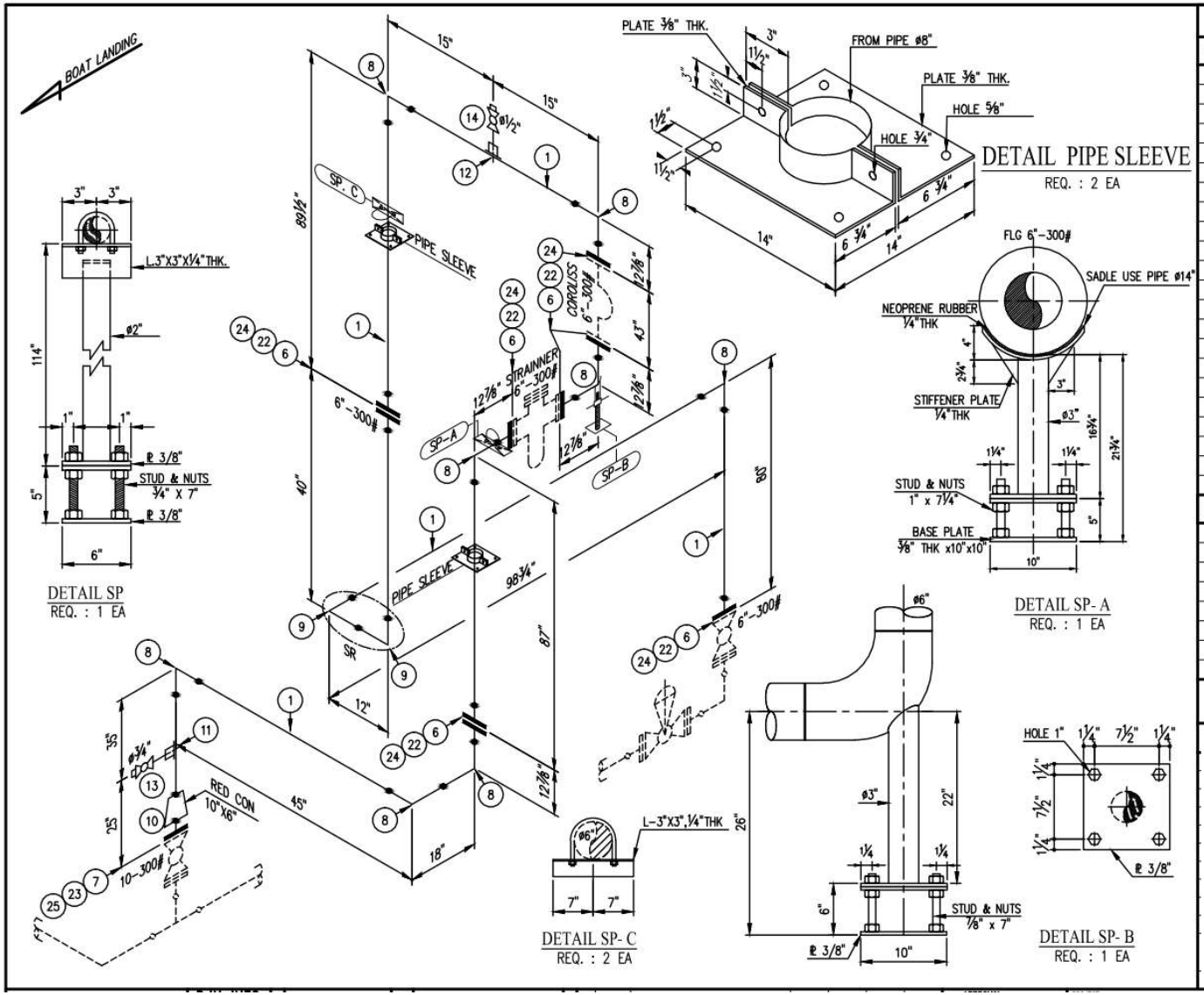

MATERIAL TAKE OFF

NO.	QTY	MATERIAL FABRICATION
1	1-1/4 LG	PIPE, A106, B, SML, BE, 6M, 6IN, 80
2	3/4 LG	PIPE, A106, B, SML, BE, 6M, 8IN, 40
3	1 FT	PIPE, A106, B, SML, BE, 6M, 3IN, 40
4	5 EA	PIPE, A106, B, SML, BE, 6M, 2IN, 40
5	4 EA	PIPE, A106, B, SML, BE, 6M, 14IN, 40
6	2 EA	FLANGE, WN, CS, A105, RF, 300, 80, 6IN
7	1 EA	FLANGE, WN, CS, A105, RF, 300, 80, 10IN
8	1 EA	ELBOW, 90, LR, A234, WPB, SML, BW, S80, 6IN
9	1 EA	ELBOW, 90, SR, A234, WPB, SML, BW, S80, 6IN
10	1 EA	REDUCER, CONCENTRIC, BW, 10INX6IN, 80, AB16.9
11	1 EA	SOCKOLET, CS, A105, 3000, 3/4X6IN, SW
12	1 EA	SOCKOLET, A105, SW, 6000, 1/2X6IN
13	1 EA	VALVE, BALL, A105, SW+NIPXNPT, ML, 800, 3/4IN
14	1 EA	VALVE, BALL, A105, SW+NIPXNPT, ML, 800, 1/2IN
15	1 EA	PLATE, MTL, CS, A36, 1200X2400X9MM
16	2 EA	PLATE,MTL,CS,A36,1200X2400X6MM
17	1 EA	BOLT, STUD, A193, B7, 1IN, 7.1/4IN, 2NUT
18	1 EA	BOLT, STUD, A193, B7, 7/8IN, 7IN, 2NUT
19	1/2 LG	BOLT, STUD, 193, B7, 3/4IN, 7IN, UNC, 2NUT
20	1/4 SHT	BOLT, STUD, A193, B7, 3/4IN, 3IN, 2NUT
21	1/16 SHT	ANGLE, STRUC, CS, A36, 75X75X9MM, 6M

NO.	QTY	MATERIAL INSTALLATION
22	4 EA	GASKET, SW, 304, GRAP, 6IN, 300, OIR
23	4 EA	GASKET,SW,304,GRAP,10IN,300,OIR
24	3 EA	BOLT, STUD, A193, B7, 3/4IN, 5IN, 2NUT
25	40 EA	BOLT, STUD, A193, B7, 1IN, 6.3/4IN, 2NUT
26	24 EA	SHEET, RUBBER, NEOPRENE, 2400X1200X6MM

TESTING REQUIREMENT
ENGINEERING RECOMMENDATION